YEF500 SERIES 500W



(Pending)

YEF series are single-output slim type power supply and for wide range AC input from 90VAC to 264VAC. The series to the high efficiency up to 95%, and operates from -30℃ ~ 70℃ under air convection without fan.
The series serves as a high performance power supply, solution for various industrial applications.

Features

- Universal AC Input/ Full Range
- Built-in active PFC function
- Protection:Short Circuit/Overload/ Over Voltage/Over Temperature
- Cooling by free air convection
- -30~+70℃ working temperature
- Three Years Warranty

Model Information

Yingjiao Part Number	DC Voltage	Rated Current	Rated Power	VOLTAGE ADJ.RANGE	Max.Capacitive Load
YEF500-5□	5V	80A	400W	4.5~5.5V	12000uF
YEF500-6.5□	6.5V	62A	403W	6~7V	11000uF
YEF500-12□	12V	41.7A	500.4W	11.4~12.6V	10000uF
YEF500-15□	15V	33.4A	501W	14.3~15.8V	9000uF
YEF500-24□	24V	20.9A	501.6W	22.8~25.2V	8000uF
YEF500-36□	36V	13.9A	500.4W	34.2~37.8V	6000uF
YEF500-48□	48V	10.45A	501.6W	45.6~50.4V	4000uF
YEF500-55□	55V	8.9A	489.5W	45~58V	3000uF

Model Encoding

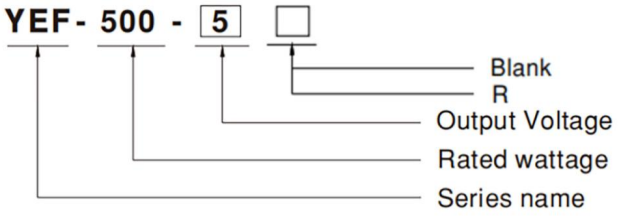

Type	Description
Blank	Enclosed
R	Buit-in DC ok active signal and redundant function .

Input

VOLTAGE RANGE	90~264VAC 127~370VDC	
FREQUENCY RANGE	47~63Hz	
POWER FACTOR (Typ.)	PF≥0.95/230VAC,	
	PF≥0.98/115VAC at full load	
AVERAGE EFFICIENCY(Typ.)	90.0%	YEF500-5
	91.0%	YEF500-6.5
	94.0%	YEF500-12
	94.0%	YEF500-15
	94.5%	YEF500-24
	95.0%	YEF500-36
	95.0%	YEF500-48
	95.0%	YEF500-55
AC CURRENT(Typ.)	4.85A/115VAC	
	2.6A/230VAC	
INRUSH CURRENT(Typ.)	Cold Start 30A/115VAC	
	Cold Start 60A/230VAC	
LEAKAGE CURRENT	<0.75mA/240VAC	

Output

RIPPLE & NOSE(max.)	200mVp-p	YEF500-5
	200mVp-p	YEF500-6.5
	200mVp-p	YEF500-12
	200mVp-p	YEF500-15
	240mVp-p	YEF500-24
	360mVp-p	YEF500-36
	360mVp-p	YEF500-48
	500mVp-p	YEF500-55
VOLTAGE TOLERANCE	±2.0%	YEF500-5
	±2.0%	YEF500-6.5
	±1.0%	YEF500-12
	±1.0%	YEF500-15
	±1.0%	YEF500-24
	±1.0%	YEF500-36
	±1.0%	YEF500-48
	±1.0%	YEF500-55
LINE REGULATION	±0.5%	YEF500-5
	±0.5%	YEF500-6.5
	±0.3%	YEF500-12
	±0.3%	YEF500-15
	±0.3%	YEF500-24
	±0.3%	YEF500-36
	±0.3%	YEF500-48
	±0.3%	YEF500-55
LOAD REGULATION	±1.0%	YEF500-5
	±1.0%	YEF500-6.5
	±0.5%	YEF500-12
	±0.5%	YEF500-15
	±0.5%	YEF500-24
	±0.5%	YEF500-36
	±0.5%	YEF500-48
	±0.5%	YEF500-55
SETUP,RISE TIME	1000ms, 50ms/230VAC at full load	
	1000ms, 50ms/115VAC at full load	
HOLD UP TIME (Typ.)	12ms/230VAC at full load	
	12ms/115VAC at full load	

Protection

SHORT CIRCUIT	Protection type: Hiccup mode, recovers automatically
	after fault condition is removed
OVER LOAD	110%-140% Rated Output Power
	Protection type: Hiccup mode, recovers automatically
	after fault condition is removed
OVER VOLTAGE	5V:5.75~6.75V
	6.5V:7~9V
	12V:13.2~15.6V
	15V:16.5V~19.5V
	24V:26.4~31.2V
	36V:39.6~46.8V
	48V:52.8~62.4V
	55V:60-69V
	Protection type :Shut down O/P voltage,re-power on to recover
OVER TEMPERATURE	Protection type :Shut down O/P voltage,
	recovers automatically after temperature goes down

FUNCTION

DC OK SIGNAL(Optional)	Contact close： PSU turns on/DC ok
	Contact open： PSU turns off/DC fail
	Contact rating(max.):30Vdc/1A resistive load
REDUNDANT(Optional)	For parallel connection protection:For parallel applications,
	when one PSU can not work, the another one will be
	automatically enabled. This can prevent the system crash,
	and provide the reliability of system.

Environment

WORKING TEMP.	-30 ℃ to +70 ℃ (Refer to "Derating Curve")
Working Humidity	20 ~ 95% RH Non-Condensing
STORAGE TEMP, HUMIDITY	-40℃ ~+85℃,10 ~ 95% RH non-condensing
TEMP. COEFFICIENT	± 0.03%/℃(0~50℃)
VIBRATION	10~ 500Hz, 5G 10min./1cycle, 60min. each along X, Y,Z axes
MTBF	167.6Khrs min.MIL-HDBK-217F(25°C)
OVER VOLTAGE CATEGORY	Ⅲ;According to EN62368-1,altitude up to 2000 meters
SAFETY PROTECTION	CLASS Ⅰ

SAFETY & EMC

SAFETY STANDARDS	BS EN/EN62368-1, BS EN/EN60335-1,EN/EN61558-1,BS EN/EN61558-2-16
WITHSTAND VOLTAGE	I/P-O/P:3.75KVAC I/P-FG:2KVAC O/P-FG:1.25KVAC
ISOLATION RESISTANCE	I/P-O/P, I/P-FG, O/P-FG:100M Ohms/ 500VDC/25 ℃/70% RH
EMC EMISSION	Compliance to BS EN/EN55032 (CISPR32) Class B, BS EN/EN61000-3-2,-3,
EMC IMMUNITY	Compliance to BS EN/EN61000-4-2,3,4,5,6,8,11,BS EN/EN55035

Note

1.All parameters NOT specially mentioned are measured at 230VAC input, rated load and 25℃ of ambient temperature.

2. Ripple & noise are measured at 20MHz of bandwidth by using a 12" twisted pair-wire terminated with a 0.1uf & 47uf parallel capacitor.

3. Tolerance :includes set up tolerance, line regulation and load regulation.

4. Derating may be needed under low input voltages. Please check the derating curve for more details.

5. The ambient temperature derating of 3.5℃/1000m is needed for operating altitude greater than 2000m(6500ft)

6.The power supply is considered a component which will be installed into a final equipment. The final equipment must be re-confirmed that it still meets EMC directives.

7. R type efficiency slightly less than the Blank type, according to the actual measurement.

8. Inrush current parameter has 10% tolerance.

Dimensions & Weight

Length:	233mm/9.17in
Width:	81mm/3.18in
Height:	31mm/1.22in
Weight:	900g

Packing

Carton Size:	31 × 28.5 x 23.5 CM
	12.2 x 11.22 x9.25 in
Master Carton Quantities:	15pcs/Carton

Dimensions and Installation

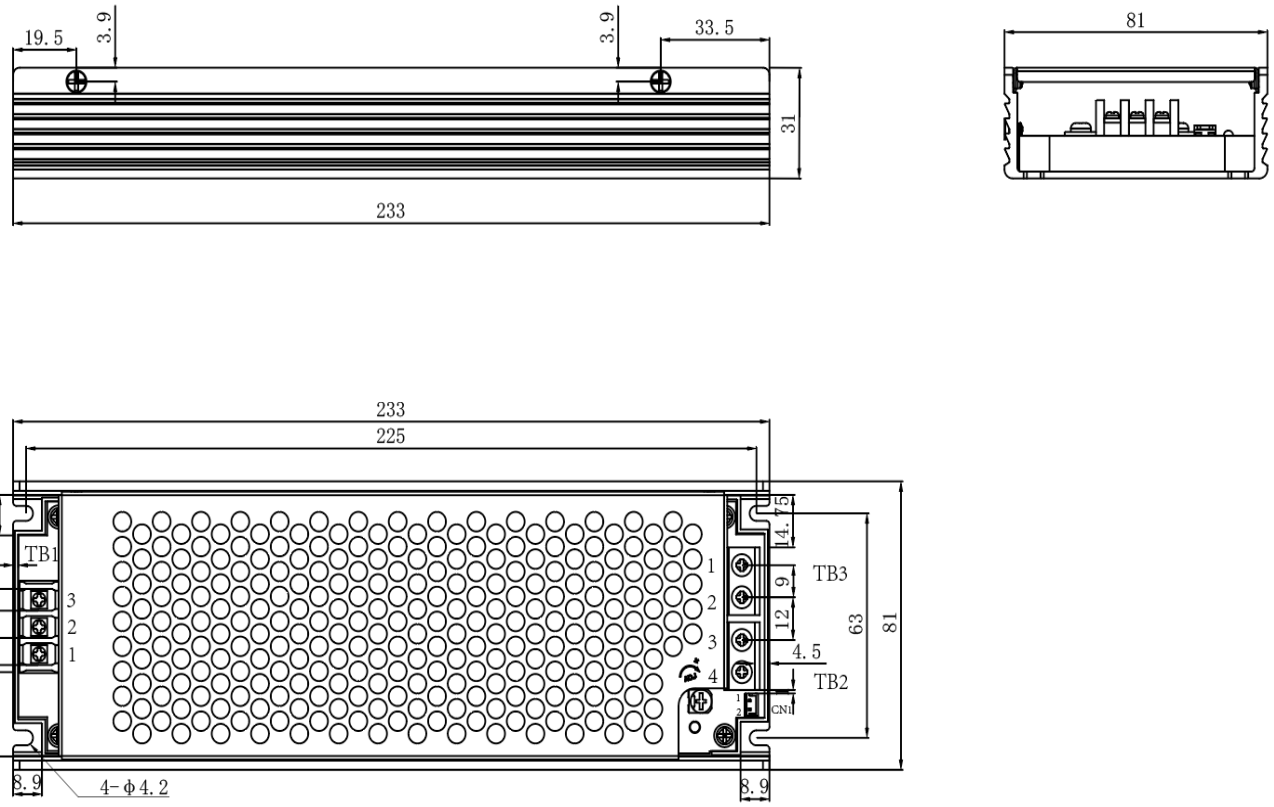

AC Input Terminal(TB1) pin NO. Assignment

Pin No.	Assignment	Terminal	Max mounting torque
1	AC/L	(DEGSON) DG28C-B-03P	5Kgf-cm
2	AC/N		
3	⏚		

DC Output Terminal(TB2,TB3) pin NO. Assignment

Pin No.	Assignment	Terminal	Max mounting torque
1,2	-V	MEL-400-02P	8Kgf-cm
3,4	+V		

DC OK Connector(CN1):JST B2B-PH-K-S or requivalent

Pin No.	Assignment	Mating Housing	Terminal
1	DC COM1	JST PHR-2 or requivalent	JST SPH-002T-P0.5S or requivalent
2	DC COM2		

Block Diagram

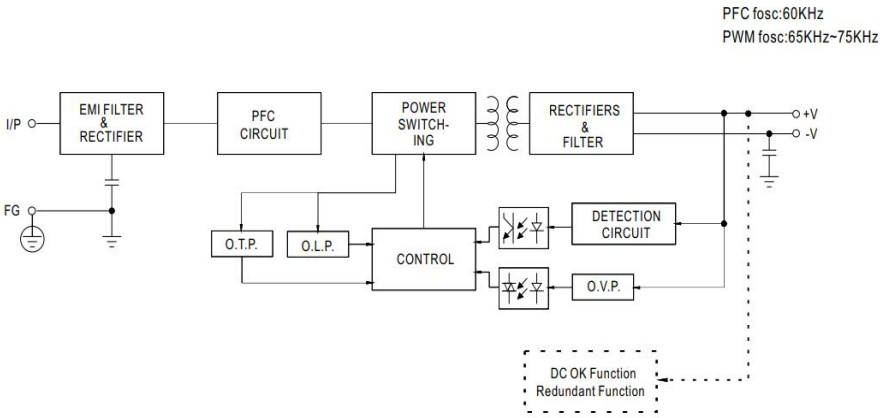

Deduction curve and temperature

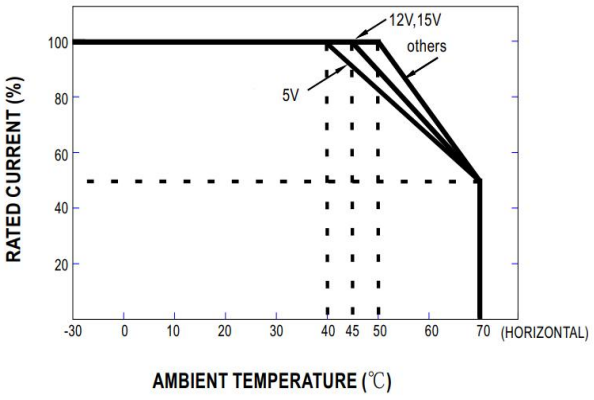

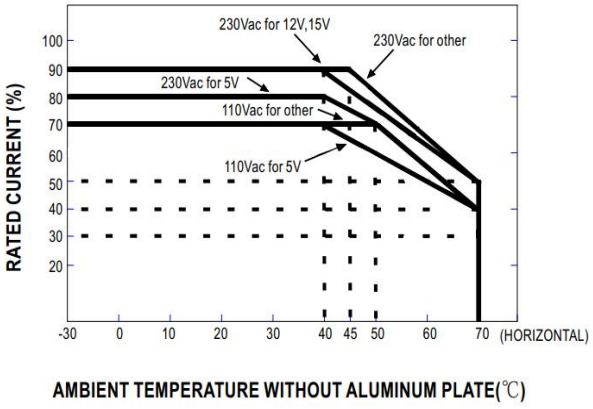

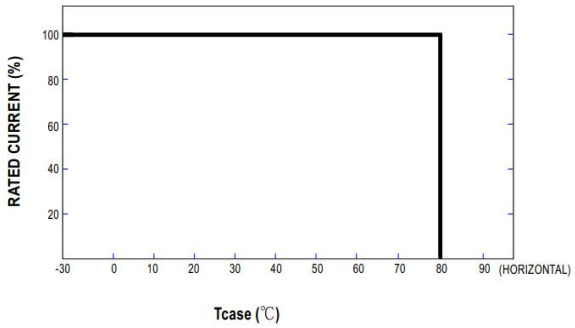

Minus output and input voltage curves

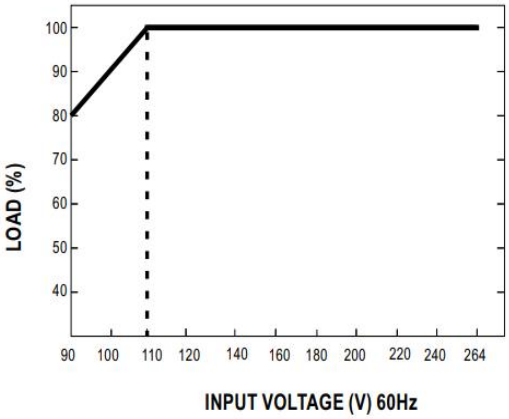

DC OK Relay Contact

Contact Close	PSU turns on/DC ok
Contact Open	PSU turns off/DC fail
Contact Rating(max.)	30Vdc/1A resistive load

Redundant function

(1)YEF Series is built-in redundant function and can be connected 2 units in parallel .
(2) When in parallel operation the maximum load should not be greater than the rated power of any PSU.

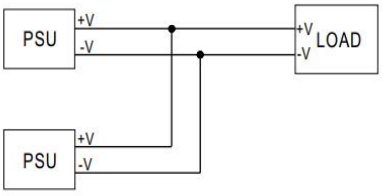

Installation Diagram

1.Operate with additional aluminum plate

In order to meet the"Derating Curve"and the "Static Characteristics",YEF series must be installed onto an aluminum plate(or the cabinet of the same size) on the bottom.The size of the suggested aluminum plate is shown as below. And for optimizing thermal performance,the aluminum plate must have an even and smooth surface (or coated with thermal grease), and YEF series must be firmly mounted at the center of the aluminum plate.

2. It is suggested to install the product with M3 combination screws, and the product must be firmly installed at the center of the aluminum plate.

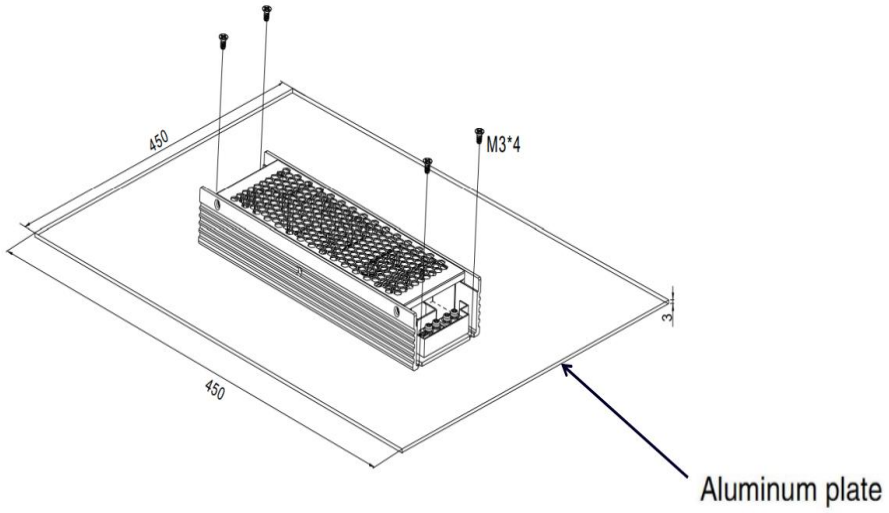

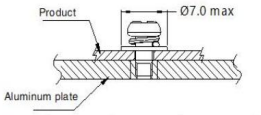

Position	Screw Spec.	Torque(max)
① – ④	M3	0.4N • m